NORTHERN BEACHES COUNCIL

No	DATE	AMENDMENTS	INITIALS

ADOPTED AT MEETING .....

WORK AS EXECUTED
BY.....
DATE.....

LEVEL DATUM	AHD	AUTOCAD	2017–38.DWG
ORIGIN OF LEVELS	SSM35324 (RL12.625)	DATE:	SEPTEMBER 2017
CO–ORD SYSTEM		RECOMMENDED FOR APPROVAL :	
ORIGIN OF CO–ORDS			
SURVEY AZIMUTH	SSM35324–PM11664		
DATA BASE	FIELD BOOK	APPROVED :	
SURVEYED	G.FARDELL	Construction Engineer	

G.FARDELL
Drawn

APPROVED FOR CONSTRUCTION :
Principal Engineer Works

DESIGN APPROVED :
Principal Engineer Traffic / Stormwater

10 20 30 40 50 60 70 80 90 100 150 200mm

HUDSON PARADE

CLAREVILLE

ROAD DETAIL

PLAN No.
2017–38

SHEET No.	REVISION
1	1

Cad File No: \Urban\Drawings – Current\Hudson Pde – Hilltop Rd\2019–10 Hudson Pde\Footpath\Drawings\Current\PWG\ TCI–Hudson Parade–Footpath–CONCEPT – 2013 DM.dxf

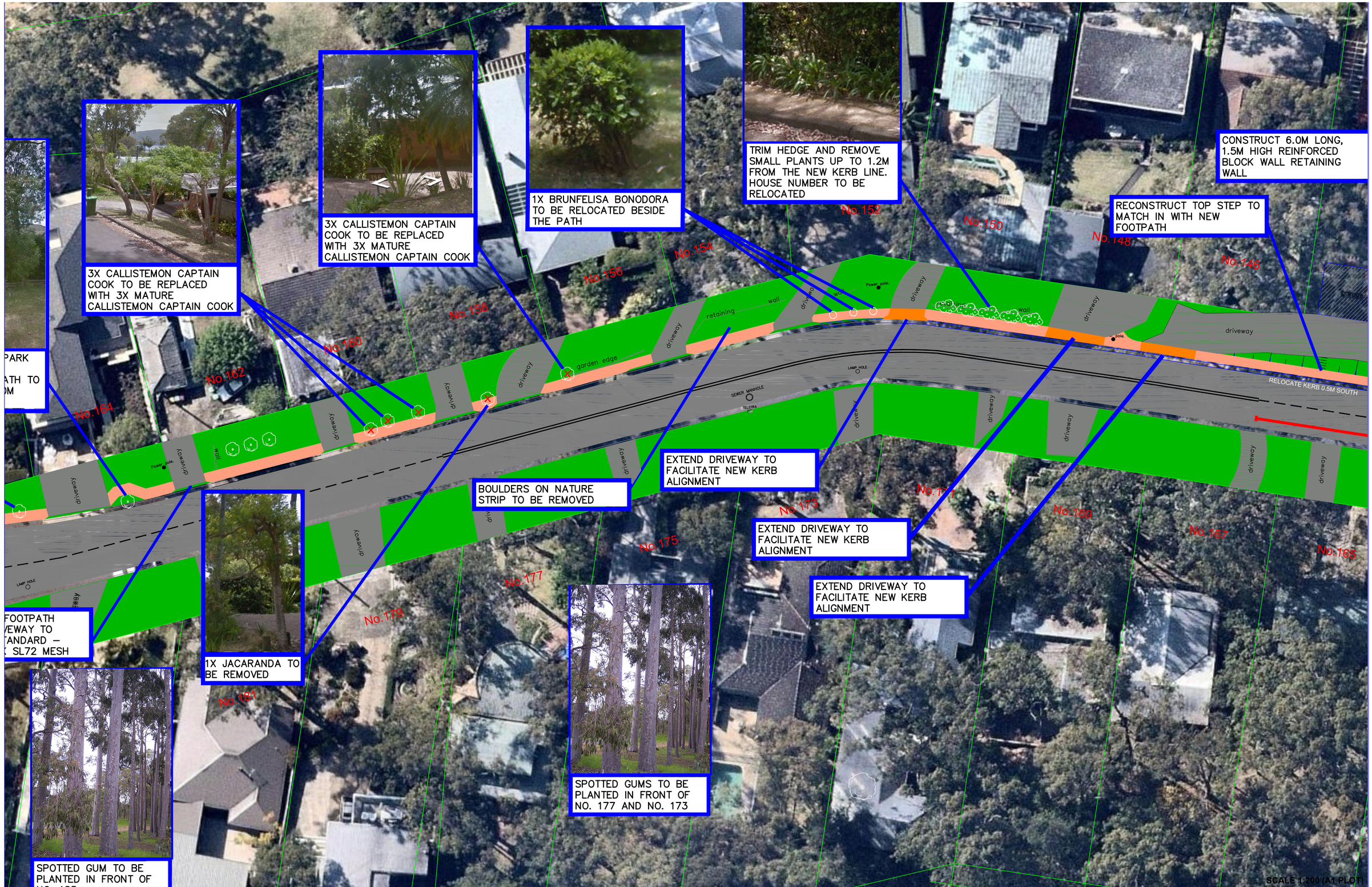

NORTHERN BEACHES COUNCIL

No	DATE	AMENDMENTS	INITIALS

ADOPTED AT MEETING .....

WORK AS EXECUTED
BY.....
DATE .....

LEVEL DATUM	AHD
ORIGIN OF LEVELS	SSM35324 (RL12.625)
CO-ORD SYSTEM	
ORIGIN OF CO-ORDS	
SURVEY AZIMUTH	SSM35324–PM11664
DATA BASE	FIELD BOOK
SURVEYED	G.FARDELL

AUTOCAD	2017–38.DWG
DATE:	SEPTEMBER 2017
RECOMMENDED FOR APPROVAL : Designer	
APPROVED : Construction Engineer	

G.FARDELL Drawn	
APPROVED FOR CONSTRUCTION : Principal Engineer Works	
DESIGN APPROVED : Principal Engineer Traffic / Stormwater	

10 20 30 40 50 60 70 80 90 100 150 200mm

HUDSON PARADE

CLAREVILLE

ROAD DETAIL

PLAN No. 2017–38

SHEET No. 2 | REVISION 1

Cad File No: \Urban\Drawings – Current\Hudson Pde – Hilltop Rd\2019–10 Hudson Parade Footpath\Drawings\Current\DWG\ TCI–Hudson Parade–Footpath–CONCEPT – 2013 DM.dxf

Plotted on 22 Oct 2019 11:11 PM

CONSTRUCT 6.0M LONG, 1.5M HIGH REINFORCED BLOCK WALL RETAINING WALL

TRUCT TOP STEP TO
N WITH NEW
TH

CLEAR BAMBOO 1.2M FROM BACK OF KERB AND REMOVE STUMP

EXTEND DRIVEWAY TO FACILITATE NEW KERB ALIGNMENT

TRIM VEGETATION 1.2M FROM BACK OF KERB AND REMOVE 1X COTTON PALM

MATCH NEW FOOTPATH TO MEET EXISTING STAIRS AND CONCRETE SLAB

PROPOSED NO PARKING RESTRICTIONS

EXTEND DRIVEWAY TO FACILITATE NEW KERB ALIGNMENT

1X DRACAENA MARGINATA TO BE REMOVED

EXTEND
FACILIT
ALIGNM

No.146 No.144 No.142 No.138 No.136 No.134 No.132 No.130 No.167 No.165 No.163 No.161 No.159 No.157 No.155 No.153 No.151

driveway garage garage RELOCATE KERB 0.5M SOUTH Hydrant Power pole. SEWER MANHOLE wall steps retaining

SCALE 1:200 (A1 PLOT)

NORTHERN BEACHES COUNCIL

No	DATE	AMENDMENTS	INITIALS

ADOPTED AT MEETING .....

WORK AS EXECUTED
BY.....
DATE .....

LEVEL DATUM	AHD	AUTOCAD	2017-38.DWG
ORIGIN OF LEVELS	SSM35324 (RL12.625)	DATE:	SEPTEMBER 2017
CO-ORD SYSTEM		RECOMMENDED FOR APPROVAL :	
ORIGIN OF CO-ORDS		Designer	
SURVEY AZIMUTH	SSM35324-PM11664	APPROVED :	
DATA BASE	FIELD BOOK	Construction Engineer	
SURVEYED	G.FARDELL		

Drawn: G.FARDELL

APPROVED FOR CONSTRUCTION : .....
Principal Engineer Works

DESIGN APPROVED : .....
Principal Engineer Traffic / Stormwater

10 20 30 40 50 60 70 80 90 100 150 200mm

HUDSON PARADE

CLAREVILLE

ROAD DETAIL

PLAN No. 2017-38

SHEET No. 3

REVISION 1

Cad File No: \Urban\Drawings - Current\Hudson Pde - Hilltop Rd\2019-10 Hudson Parade Footpath\Drawings\Current\DWG\ TCI-Hudson Parade-Footpath-CONCEPT - 2013 DM.dxf

NORTHERN BEACHES COUNCIL

No	DATE	AMENDMENTS	INITIALS

ADOPTED AT MEETING .....

WORK AS EXECUTED
BY .....
DATE .....

LEVEL DATUM	AHD
ORIGIN OF LEVELS	SSM35324 (RL12.625)
CO-ORD SYSTEM	
ORIGIN OF CO-ORDS	
SURVEY AZIMUTH	SSM35324-PM11664
DATA BASE	FIELD BOOK
SURVEYED	G.FARDELL

AUTOCAD	2017-38.DWG
DATE:	SEPTEMBER 2017
RECOMMENDED FOR APPROVAL : Designer	
APPROVED : Construction Engineer	

G.FARDELL
Drawn

APPROVED FOR CONSTRUCTION : Principal Engineer Works

DESIGN APPROVED : Principal Engineer Traffic / Stormwater

10 20 30 40 50 60 70 80 90 100 150 200mm

HUDSON PARADE

CLAREVILLE
ROAD DETAIL

PLAN No. 2017-38

SHEET No.	REVISION
4	1

Cad File No: \Urban\Drawings - Current\Hudson Pde - Hilltop Rd\2019-10 Hudson Parade Footpath\Drawings\Current\DWG\ TCI-Hudson Parade-Footpath-CONCEPT - 2013 DM.dxf

NORTHERN BEACHES COUNCIL

No	DATE	AMENDMENTS	INITIALS

ADOPTED AT MEETING .....

WORK AS EXECUTED

BY.....

DATE .....

LEVEL DATUM	AHD	AUTOCAD	2017-38.DWG
ORIGIN OF LEVELS	SSM35324 (RL12.625)	DATE:	SEPTEMBER 2017
CO-ORD SYSTEM		RECOMMENDED FOR APPROVAL :	
ORIGIN OF CO-ORDS			
SURVEY AZIMUTH	SSM35324-PM11664	Designer	
DATA BASE	FIELD BOOK	APPROVED :	
SURVEYED	G.FARDELL	Construction Engineer	

G.FARDELL
Drawn

APPROVED FOR CONSTRUCTION :

Principal Engineer Works

DESIGN APPROVED :

Principal Engineer Traffic / Stormwater

10 20 30 40 50 60 70 80 90 100 150 200mm

HUDSON PARADE

CLAREVILLE

ROAD DETAIL

PLAN No. 2017-38

SHEET No.	REVISION
5	1

Cad File No: \Urban\Drawings - Current\Hudson Pde - Hilltop Rd\2019-10 Hudson Parade Footpath\Drawings\Current\DWG\ TCI-Hudson Parade-Footpath-CONCEPT - 2013 DM.dxf

Plotted: 22-Oct-2019 11:31 AM

NORTHERN BEACHES COUNCIL

No	DATE	AMENDMENTS	INITIALS

ADOPTED AT MEETING .....

WORK AS EXECUTED
BY.....
DATE.....

LEVEL DATUM	AHD
ORIGIN OF LEVELS	SSM35324 (RL12.625)
CO-ORD SYSTEM	
ORIGIN OF CO-ORDS	
SURVEY AZIMUTH	SSM35324–PM11664
DATA BASE	FIELD BOOK
SURVEYED	G.FARDELL

AUTOCAD	2017–38.DWG
DATE:	SEPTEMBER 2017
RECOMMENDED FOR APPROVAL : Designer	
APPROVED : Construction Engineer	

G.FARDELL Drawn	
APPROVED FOR CONSTRUCTION : Principal Engineer Works	
DESIGN APPROVED : Principal Engineer Traffic / Stormwater	

10 20 30 40 50 60 70 80 90 100 150 200mm

HUDSON PARADE

CLAREVILLE

ROAD DETAIL

PLAN No.
2017–38

SHEET No.	REVISION
6	1

Cad File No: \Urban\Drawings – Current\Hudson Pde – Hilltop Rd\2019–10 Hudson Parade Footpath\Drawings\Current\DWG\ TCI–Hudson Parade–Footpath–CONCEPT – 2013 DM.dxf
Plotted: 22 Oct 2019 - 2:31 PM

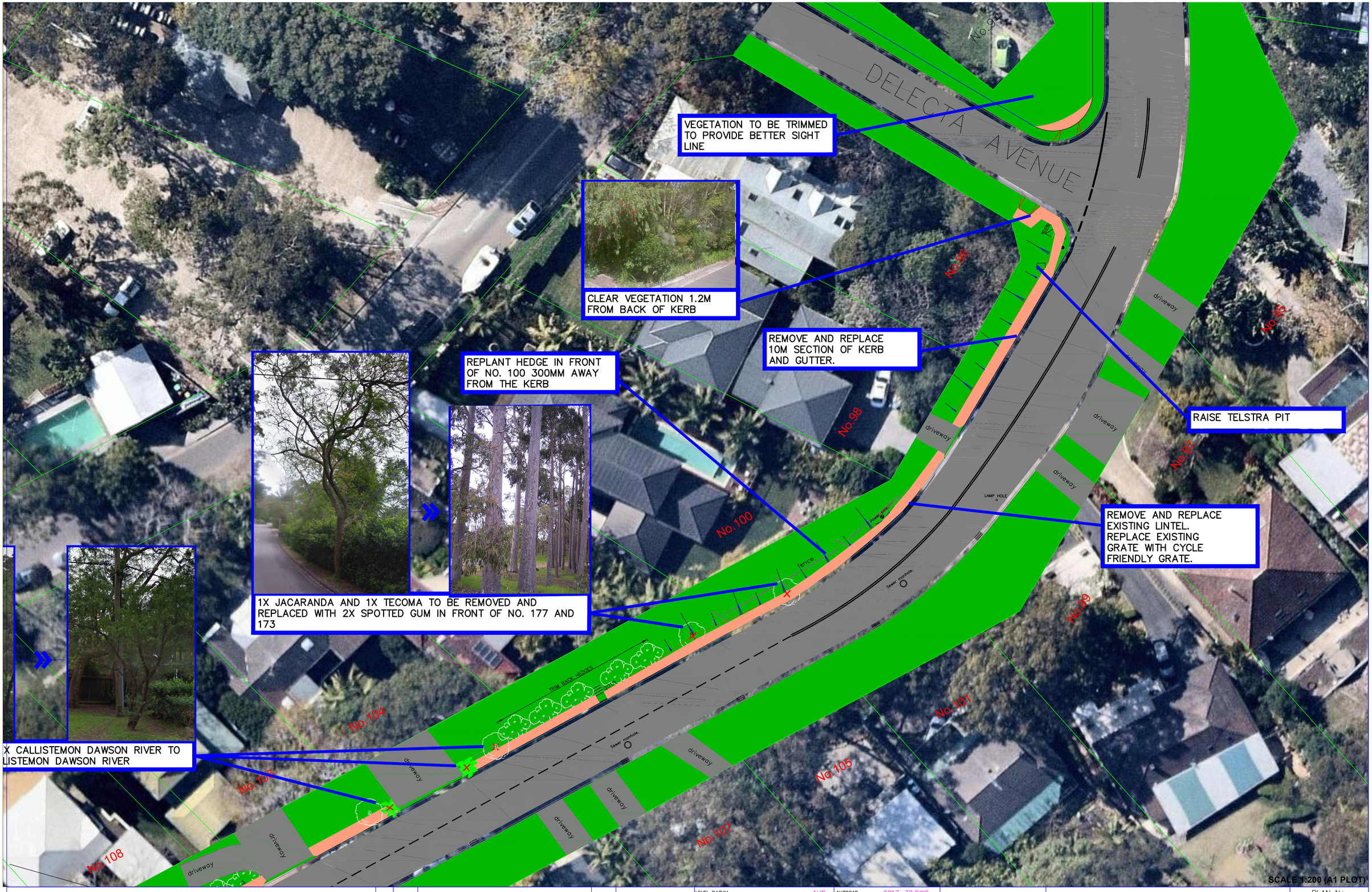

NORTHERN BEACHES COUNCIL

No	DATE	AMENDMENTS	INITIALS

ADOPTED AT MEETING .....

WORK AS EXECUTED

BY .....

DATE .....

LEVEL DATUM	AHD
ORIGIN OF LEVELS	SSM35324 (RL12.625)
CO-ORD SYSTEM	
ORIGIN OF CO-ORDS	
SURVEY AZIMUTH	SSM35324-PM11664
DATA BASE	FIELD BOOK
SURVEYED	G.FARDELL

AUTOCAD	2017-38.DWG
DATE:	SEPTEMBER 2017
RECOMMENDED FOR APPROVAL :	
Designer	
APPROVED :	
Construction Engineer	

G.FARDELL	
Drawn	
APPROVED FOR CONSTRUCTION :	
Principal Engineer Works	
DESIGN APPROVED :	
Principal Engineer Traffic / Stormwater	

10 20 30 40 50 60 70 80 90 100 150 200mm

HUDSON PARADE

CLAREVILLE

ROAD DETAIL

PLAN No. 2017-38

SHEET No.	REVISION
7	1

Cad File No: \Urban\Drawings - Current\Hudson Pde - Hilltop Rd\2019-10 Hudson Parade Footpath\Drawings\Current\DWG\ TCI-Hudson Parade-Footpath-CONCEPT - 2013 DM.dxf

Plot Date: 22 October 2019 2:31 PM

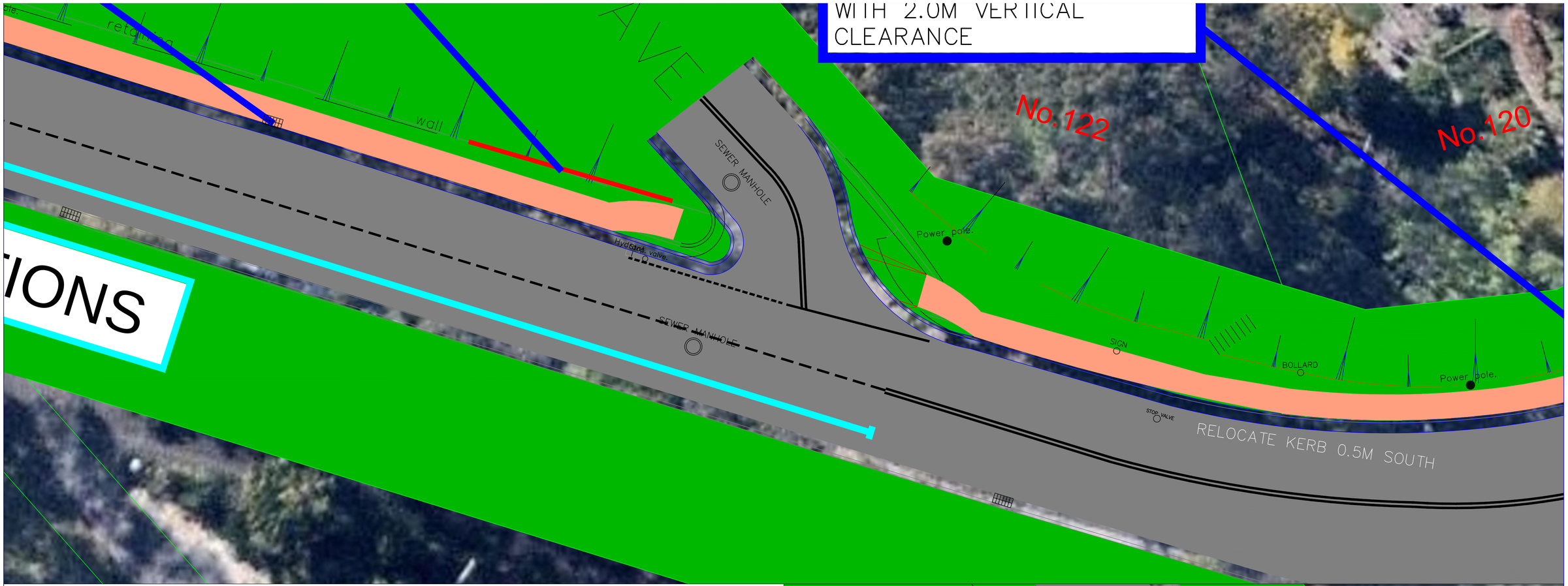

Section A-A

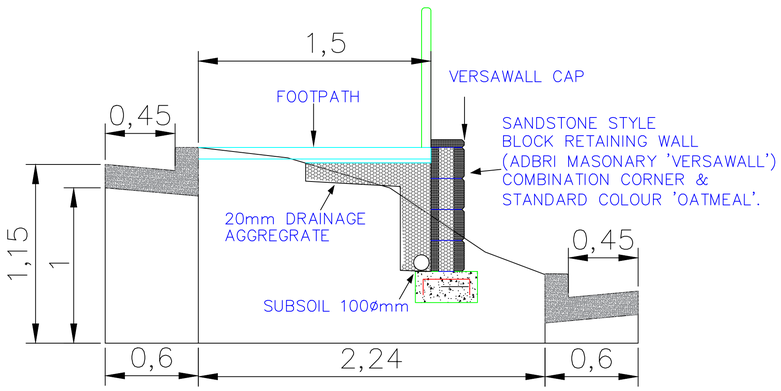

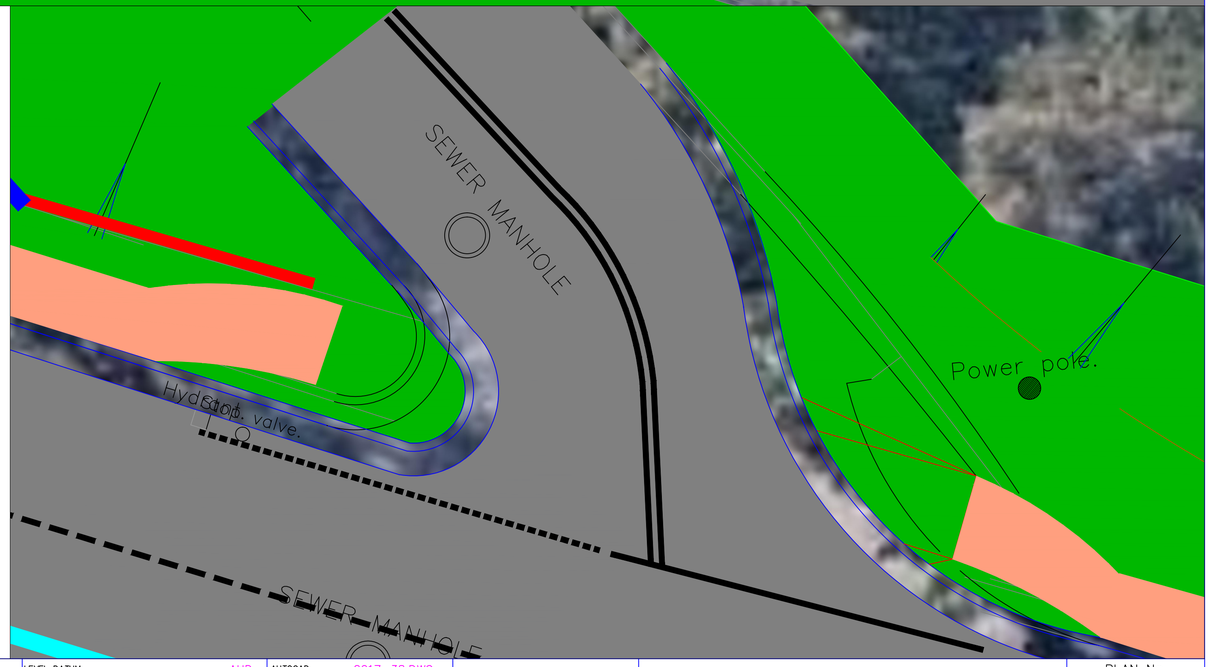

NORTHERN BEACHES COUNCIL

No	DATE	AMENDMENTS	INITIALS

ADOPTED AT MEETING .....

WORK AS EXECUTED
BY.....
DATE .....

LEVEL DATUM	AHD
ORIGIN OF LEVELS	SSM35324 (RL12.625)
CO-ORD SYSTEM	
ORIGIN OF CO-ORDS	
SURVEY AZIMUTH	SSM35324–PM11664
DATA BASE	FIELD BOOK
SURVEYED	G.FARDELL

AUTOCAD	2017–38.DWG
DATE:	SEPTEMBER 2017
RECOMMENDED FOR APPROVAL : Designer	
APPROVED : Construction Engineer	
Drawn	G.FARDELL
APPROVED FOR CONSTRUCTION : Principal Engineer Works	
DESIGN APPROVED : Principal Engineer Traffic / Stormwater	

10 20 30 40 50 60 70 80 90 100 150 200mm

HUDSON PARADE

CLAREVILLE

ROAD DETAIL

PLAN No. 2017–38

SHEET No. 8

REVISION 1

Cad File No: \Urban\Drawings – Current\Hudson Pde – Hilltop Rd\2019–10 Hudson Parade Footpath\Drawings\Current\TCI–Hudson Parade–Footpath–CONCEPT – 2013 DM.dxf

Plot Date: 22 Oct 2019 Plot Time: 2:31 PM